PUC 1030 Ceiling plate turn and tilt

Article number (SKU)	7210304
Colour	Silver

The PUC 1030 ceiling plate is a part of the modular Connect-it system with which you can create your own ceiling solution for small- to medium-sized displays.

This ceiling plate is suitable for flat and inclined ceilings (up to 90°). Combine this ceiling plate with one of the poles from the Connect-it Series (PUC 2108, PUC 2115, PUC 2130, PUC 2308, PUC 2315 or PUC 2330) and a Connect-it interface (PFI 3010, PFI 3020, PFI 3030 or PFI 3040) for a complete ceiling solution.

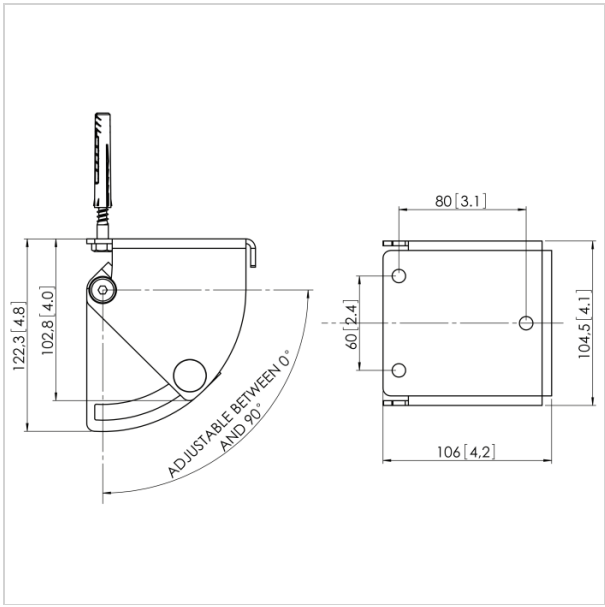

PUC 1030 Ceiling plate turn and tilt

VOGEL'S HOLDING BV 2017 (c) All rights reserved
Subject to printing errors, technical and price amendments
Date: 10-11-2017

www.vogels.com

Specifications

Product specifications

Product type number	PUC 1030
Article number (SKU)	7210304
Colour	Silver
EAN single box	8712285317088
TÜV certified	Yes
Tilt	Tilt up to 90°
Turn	Up to 360°
Guarantee	5 years
Max. weight load (kg)	30

Features

Functionality	Tilt